ACCU-SCOPE®

# MANUAL

# 3075-GS

## Zoom Stereo Microscope on Gem Stand

## MANUAL

73 Mall Drive, Commack, NY 11725 • 631-864-1000 (P) • 631-543-8900 (F)
www.accu-scope.com • info@accu-scope.com

# CONTENTS

SAFETY NOTES ..... 2

REPAIR, CARE AND MAINTENANCE ..... 2

INTRODUCTION ..... 3

UNPACKING AND COMPONENTS ..... 3

COMPONENTS DIAGRAM ..... 3

ASSEMBLY ..... 4-6

ADJUSTMENT AND OPERATION ..... 7-9

REPLACING THE ILLUMINATOR LAMPS ..... 10-11

TROUBLESHOOTING ..... 12

MAINTENANCE ..... 13

SERVICE ..... 13

WARRANTY ..... 13

# SAFETY NOTES

1. Open the shipping carton carefully to prevent any accessory, i.e. objectives or eyepieces, from dropping and being damaged.

2. Keep the instrument out of direct sunlight, high temperature, humidity, and dusty environments.

3. If any specimen solutions or other liquids splash onto the stage or any other component, disconnect the power cord immediately and wipe up the spillage. Otherwise, the instrument may be damaged.

4. **LAMP REPLACEMENT -- CAUTION**: the glass housing of the lamp may be extremely hot. DO NOT attempt to change the lamp before it is completely cooled or without wearing adequate skin protection.

5. All electrical connectors (power cord) should be inserted into an electrical surge protector to prevent damage due to voltage fluctuations.

6. **FUSE REPLACEMENT** -- For safety when replacing the fuse (ONLY replace with the same size, type and rating of original fuse), be sure the main switch is in the off position, disconnect the power cord from outlet, and replace the fuse. Reconnect the power cord and turn unit on.

7. Confirm that the input voltage indicated on your Microscope corresponds to your line voltage. The use of a different input voltage other than indicated will cause severe damage to the Microscope.
   NOTE: Always plug the Microscope power cord into a suitable grounded electrical outlet.
   A grounded 3-wire cord is provided.

# CARE AND MAINTENANCE

1. Do not attempt to disassemble any component including eyepieces, objectives or the focusing assembly.

2. Keep the instrument clean; remove dirt and debris regularly. Accumulated dirt on metal surfaces should be cleaned with a damp cloth. More persistent dirt should be removed using a mild soap solution. Do not use organic solvents for cleansing.

3. The outer surface of the optics should be inspected and cleaned periodically using an air bulb. If dirt remains on the optical surface, use a soft, lint free cloth or cotton swab dampened with a lens cleaning solution (available at camera stores). All optical lenses should be swabbed using a circular motion. A small amount of absorbent cotton wound on the end of a tapered stick makes a useful tool for cleaning recessed optical surfaces. Avoid using an excessive amount of solvents as this may cause problems with optical coatings or cemented optics or the flowing solvent may pick up grease making cleaning more difficult.

4. Store the instrument in a cool, dry environment. Cover the microscope with the dust cover when not in use.

5. ***ACCU-SCOPE*** microscopes are precision instruments which require periodic servicing to maintain proper performance and to compensate for normal wear. A regular schedule of preventative maintenance by qualified service personnel is highly recommended. Your authorized ***ACCU-SCOPE*** distributor can arrange for this service

# INTRODUCTION

Congratulations on the purchase of your new ***ACCU-SCOPE*** microscope. ***ACCU-SCOPE*** microscopes are engineered and manufactured to the highest quality standards. Your microscope will last a lifetime if used and maintained properly. ***ACCU-SCOPE*** microscopes are carefully assembled, inspected and tested by our staff of trained technicians in our New York facility. Careful quality control procedures ensure each microscope is of the highest quality prior to shipment.

# UNPACKING AND COMPONENTS

Your microscope arrived packed in a molded shipping carton. ***Do not discard the carton*:** the shipping carton should be retained for reshipment of your microscope if needed. Avoid placing the microscope in dusty surroundings or in high temperature or humid areas as mold and mildew can form. Carefully remove the microscope from the shipping carton and place the microscope on a flat, vibration-free surface.

# COMPONENTS DIAGRAM

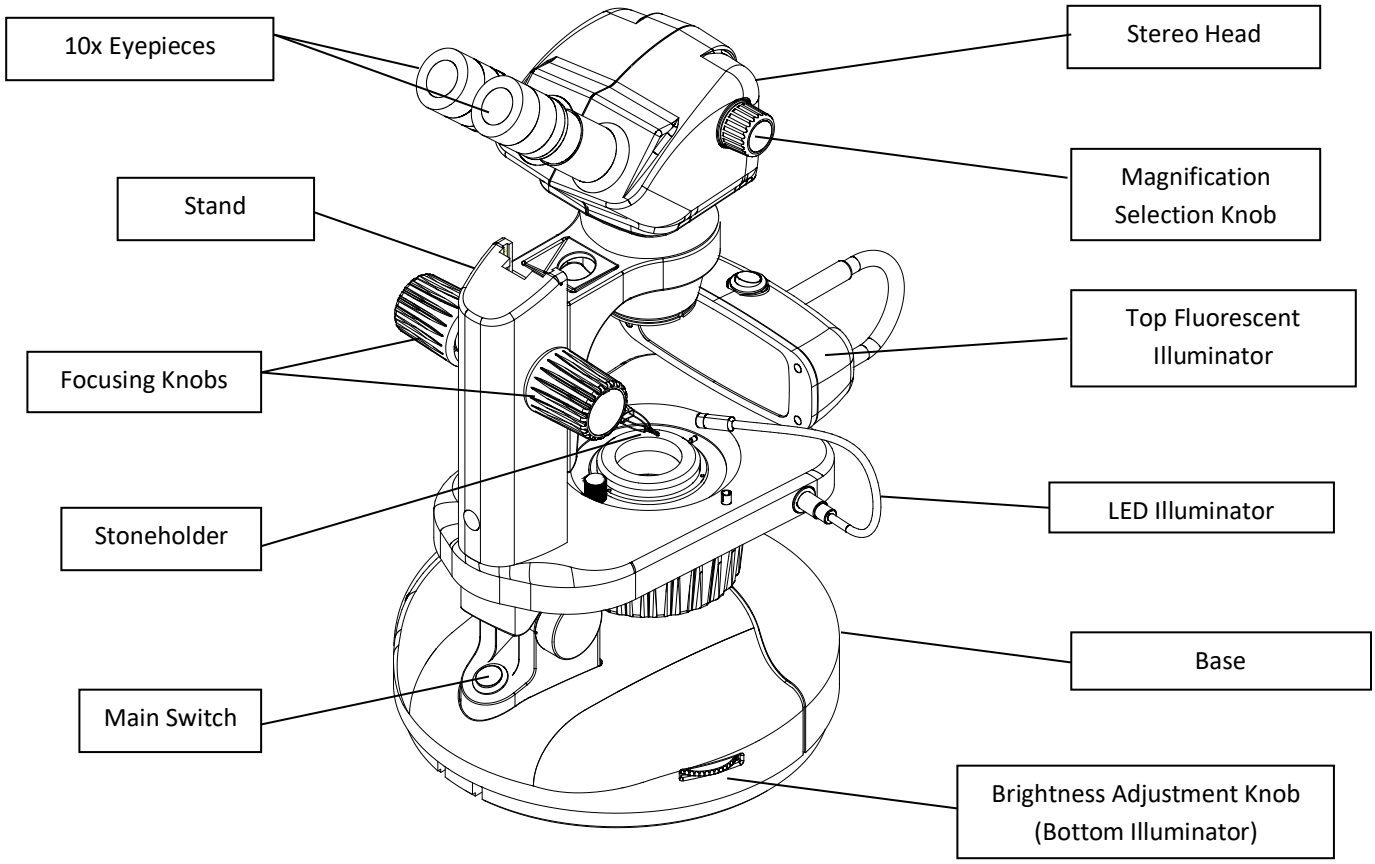

# ASSEMBLY DIAGRAM

The diagram below shows how to assemble the various components. The numbers indicate the order of assembly.

When assembling the Microscope, make sure that all parts are free of dust and dirt, and avoid scratching any parts or touching glass surfaces.

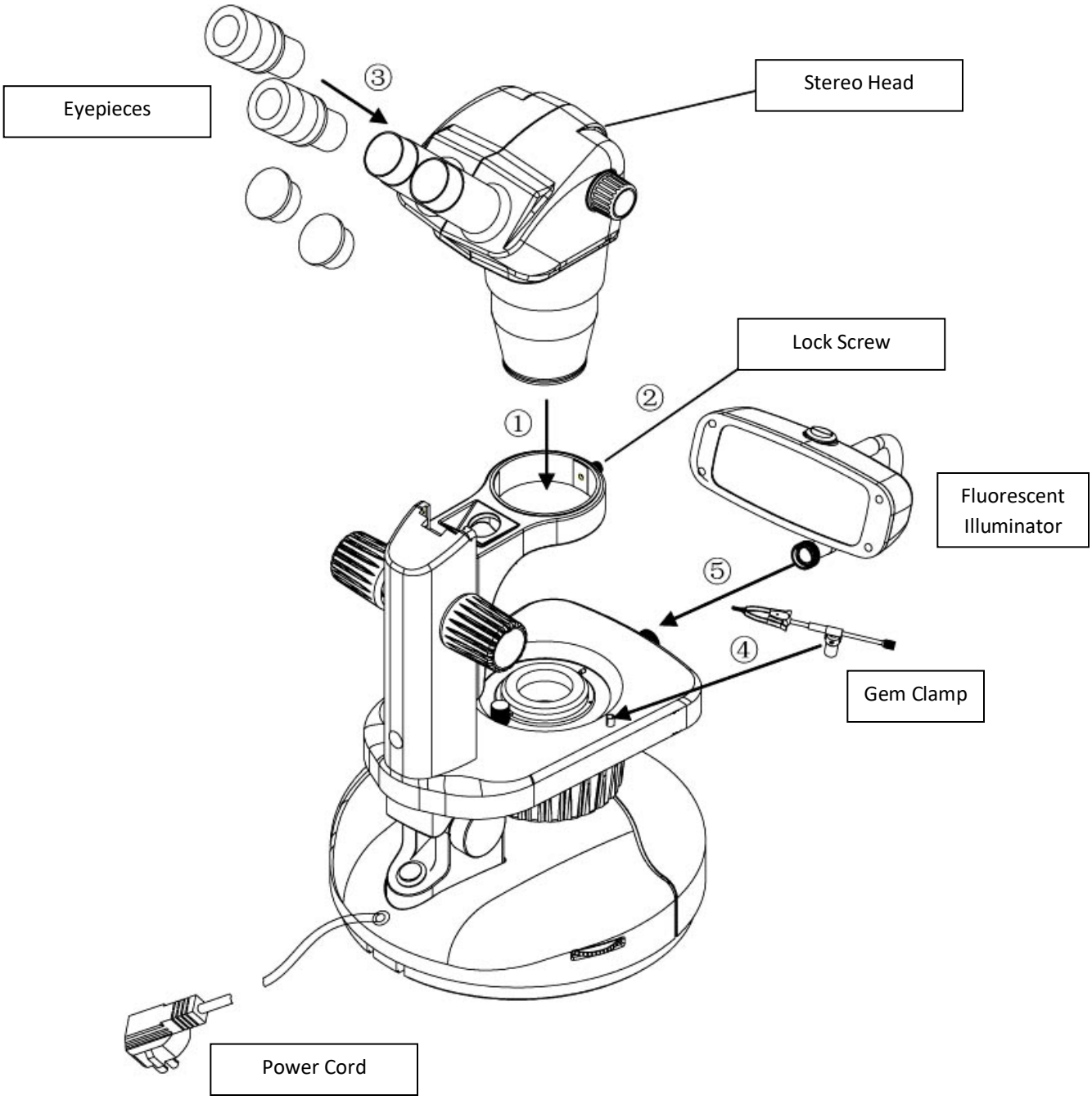

# DETAILED ASSEMBLY

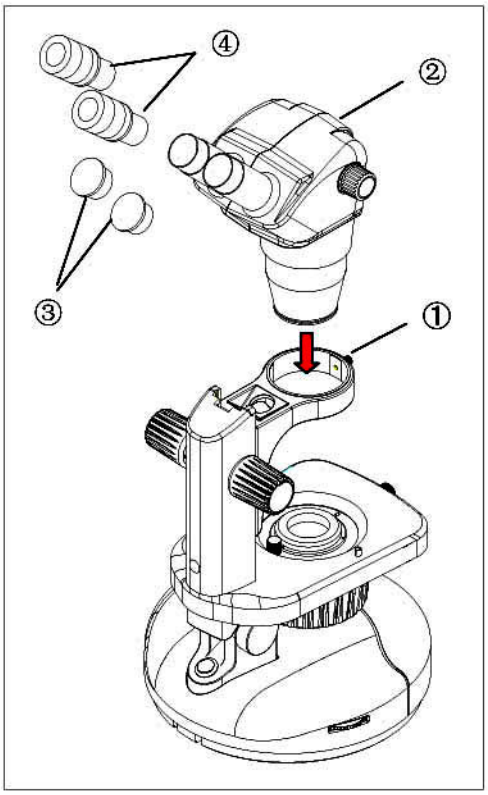


Fig. 1

**Mounting the Stereo Head (Fig. 1)**

Loosen the lock screw ① on the stand and insert the stereo head ② into the bracket of the stand. Tighten the lock screw ① to secure the stereo head.

**Installing the Eyepieces (Fig. 1)**

Remove the eyepiece dust caps ③ and insert the eyepieces ④ until they stop as shown in Fig. 1.

**Installing the Stoneholder (Fig. 2)**

The stage has two stoneholder mounts ⑥ on either side of the stage where you can attach the stoneholder ⑤

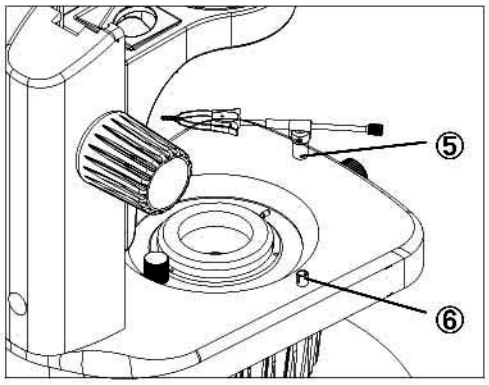


Fig. 2

# DETAILED ASSEMBLY
*(continued)*

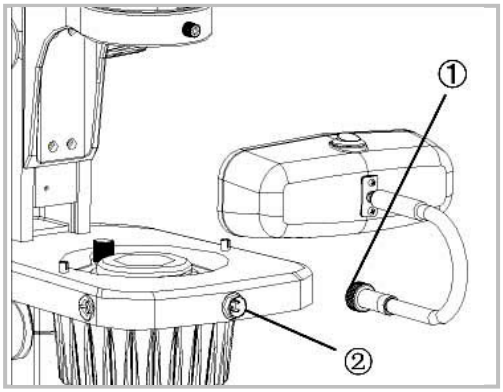


Fig. 3

**Installing the Fluorescent Overhead Light (Fig. 3)**

Connect the overhead fluorescent light to the front of the stage by lining up the male and female holes on the snap connector ②.

Once connected, slide the securing threaded connector into place. Hand-tighten the connector ①.

If possible, it is recommended to further tighten the connector by using rubber tipped pliers. This will ensure that the gooseneck will not loosen and rotate as the overhead fluorescent light is being used.

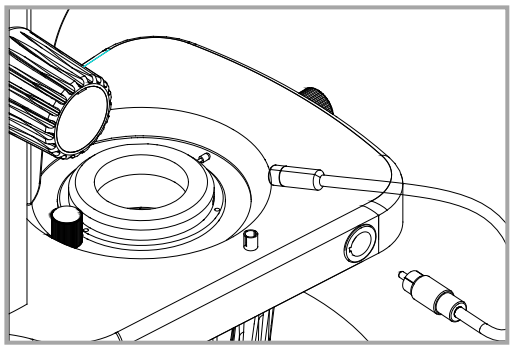

Fig. 3A

**Installing the Optional LED Light (Fig. 3A)**

Remove the plastic cap covering the opening to the LED socket. Insert the LED light guide into the socket and seat it as deeply as possible.

The LED light may be varied in intensity by adjusting the intensity dial labeled “Reflected” on the side of the Gemstand.

# ADJUSTMENT & OPERATION *(continued)*

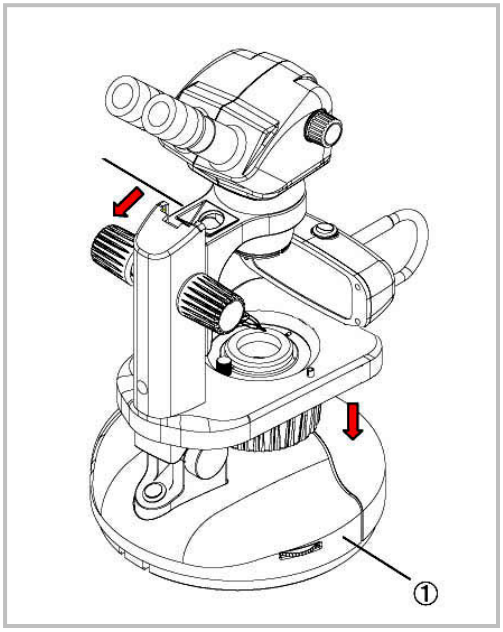


Fig. 4

**Rotating the Base (Fig. 4)**

Rotate the Microscope to a suitable position for viewing comfort by gently pushing the base ①.

**Adjusting the Tilt of the Stand (Fig. 4)**

The tilt of the stand is adjustable by holding down the front of the base ① with one hand, and taking hold of the bracket with the other hand and then pushing or pulling the bracket to obtain the most comfortable viewing position. The stand can be adjusted from 0-38º.

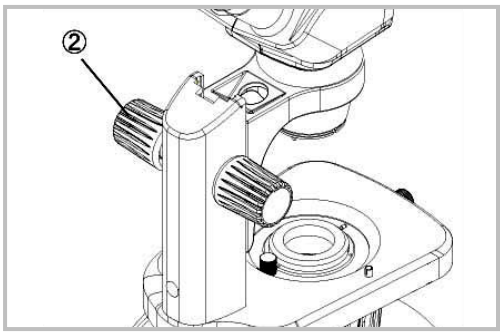


Fig. 5

**Adjusting the Rotation Tension Of the Focus Adjustment Knob (Fig. 5)**

To adjust tension, hold both left and right focus adjustment knobs ② with both hands, hold the left knob (to prevent it from turning), and rotate the right knob clockwise to increase (tighten) or counterclockwise to decrease (loosen) the focus knob tension.

After tension adjustment has been completed, always rotate both adjustment knobs in the same direction.

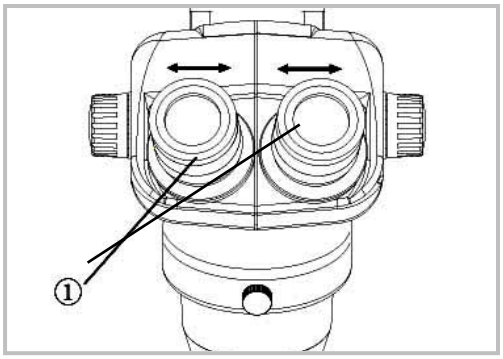


Fig. 6

**Adjusting Interpupillary Distance (Fig. 6)**

Different users have different interpupillary distances (this distance is between the centers of the pupils of each eye). When the operator changes, it will be necessary to adjust the interpupillary distance. While looking through the eyepieces, hold the left ① and right ① eyetubes of the viewing head and adjust the eyetubes by opening or closing them until the left and right fields of view coincide completely and you are able to see a complete circle.

# ADJUSTMENT & OPERATION

*(continued)*

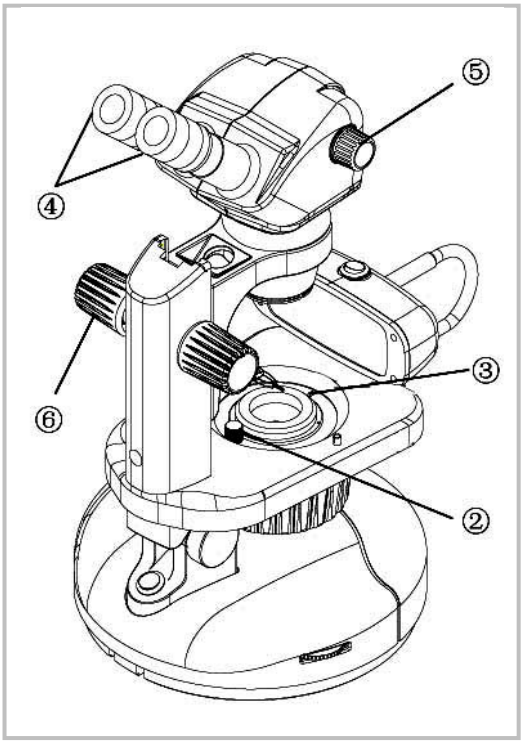


Fig. 7

**Adjusting the Diopter Ring (Fig. 7)**

Close the baffle by turning the baffle control knob ② clockwise, and close the iris diaphragm by turning the iris diaphragm control lever ③ clockwise.

Set the diopter rings ④ of both eyepieces to the "0" position (do this when users change, because different users have differing diopters).

Rotate the magnification selector knob ⑤ to 3x, and rotate the focusing knob ⑥ to focus on the iris diaphragm.

Rotate the magnification selector knob to the 1x magnification position ⑤ and adjust the diopter ring ④ on left eyepiece to focus the specimen – repeat for the right eyepiece.

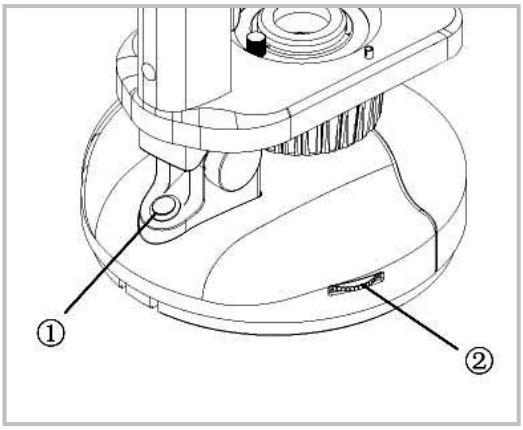


Fig. 8

**Adjusting the Bottom Illumination (Fig. 8)**

Plug the GEM base into a 110v power supply outlet.

Turn the main switch ① to the "I" (on) position, and rotate the brightness adjustment knob ② to obtain a comfortable brightness.

# ADJUSTMENT & OPERATION

*(continued)*

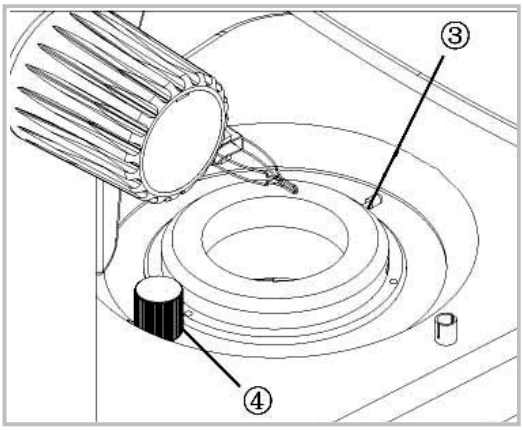


Fig. 9

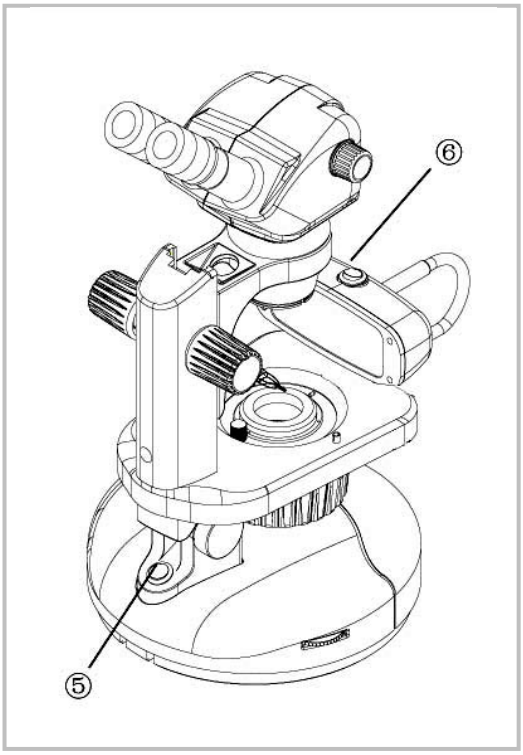


Fig. 10

**Adjusting the Iris Diaphragm (Fig. 9)**

The iris diaphragm restricts the diameter of the beam of light entering the objective and therefore excludes extraneous light to improve image contrast. It can be adjusted by moving the diaphragm control lever ③.

**Brightfield Illumination**

Open the baffle by rotating the baffle control knob ④ counterclockwise. Inclusions should stand out as dark objects against a bright background.

**Darkfield Illumination**

Close the baffle by rotating the baffle control knob ④ clockwise. The stone is illuminated with diffused light from the sides. View the stone against the baffle's black, non-reflective background. Inclusions stand out as bright objects.

**Adjusting the Top Fluorescent Illuminator (Fig. 10)**

By turning the main switch ⑤ to "I" (on) and the fluorescent lamp switch ⑥ to "I" (on), the top illuminator will provide the equivalent of a northern daylight overhead light source.

# REPLACING THE LAMPS

Fig. 11

**Replacing the Halogen Lamp in the Bottom Illuminator (Fig. 11)**

The darkfield illuminator (bottom light) uses one 6 volt, 20 watt tungsten halogen lamp – **CAT #6047C**.

To replace the lamp, tilt the Microscope all the way back (see page 8).

On the bottom of the darkfield housing is a trap door. Open the trap door by loosening the screw (see Fig. 11). The screw can be loosened by hand or by using the small flathead screwdriver included in the original shipment of the Gem stand. The door will open and the lamp can be removed.

**IMPORTANT:** When replacing the lamp, be careful not to touch the new lamp with your fingers as the oils and dirt on your fingers can affect the lamp's performance. To insert the new lamp wrap the plastic bag supplied with the lamp or a piece of lens tissue around the lamp before handling/inserting it.

# REPLACING THE LAMPS *(continued)*

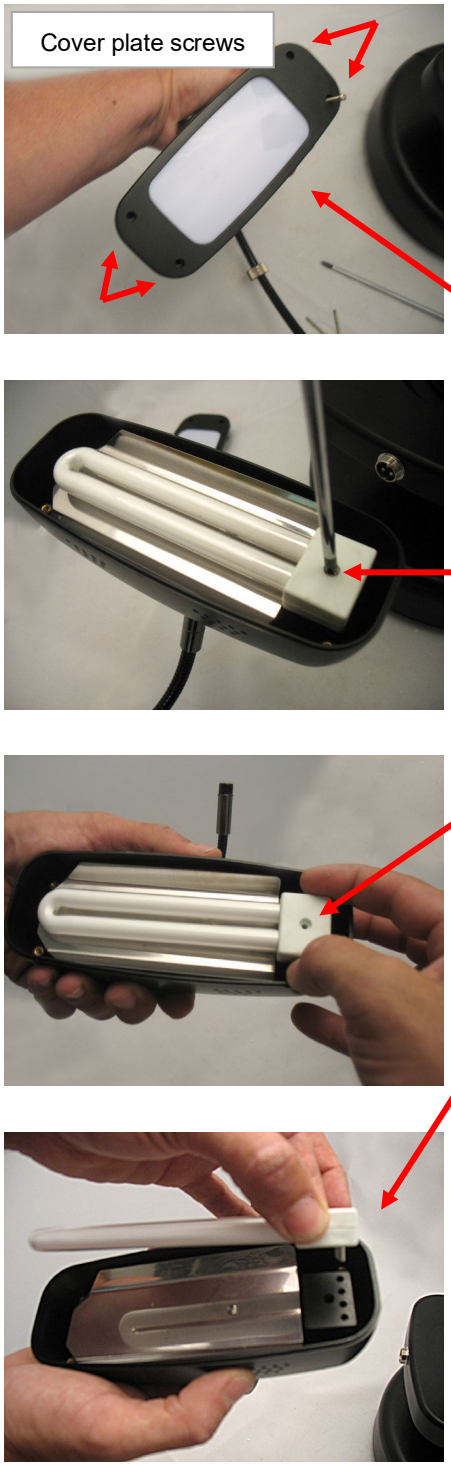


Fig. 12

**Replacing the Fluorescent Lamp in the Top Illuminator (Fig. 12)**

The fluorescent lamp in the overhead light uses one 7 watt fluorescent lamp – **CAT #14120.**

To replace the lamp, disconnect the overhead light from the stage of the GEM stand base (see page 8).

Remove the cover plate of the lamp housing by unscrewing the four screws on each corner of the cover plate using the Phillips head screwdriver that was included with your Gem stand.

The fluorescent lamp is connected to a socket in the housing by a four pin connector. The socket is held in place with a screw. Remove the screw from the lamp socket.

Carefully pull the fluorescent lamp out from the socket by the base of the lamp to avoid accidental breakage.

Insert the new lamp into the socket and replace the lamp socket screw -- be sure the lamp is securely in before replacing the cover plate on the lamp housing.

Once the lamp housing is reassembled, reattach the overhead fluorescent light to the stage of the GEM stand base (see page 8).

# TROUBLESHOOTING

Under certain conditions, performance of this unit may be adversely affected by factors other than defects. If a problem occurs, please review the following list and take remedial action as needed. If you cannot solve the problem after checking the entire list, please contact your local dealer for assistance.

| Trouble | Cause | Remedy |
|---|---|---|
| Double images | Interpupillary distance is not correct | Readjust it |
| | Diopter adjustment is not correct | Readjust it |
| Dirt appears in the view field | Dirt on the specimen | Clean specimen |
| | Dirt on the surfaces of eyepieces | Clean eyepieces |
| | Dirt on surface of objective | Clean objective |
| | Dirt on stage | Clean stage |
| Image is not clear | Dirt on the surface of objectives | Clean objectives |
| Image is not clear while focusing | Diopter adjustment is not correct | Readjust diopter |
| | Focusing is not correct | Readjust it |
| The focusing knob is not smooth | The focusing knob is too tight | Loosen it to a suitable position |
| The image is obscure because of the head slipping down during observation | The focusing knob is too loose | Adjust the tension on the focus knobs |
| Lamp does not work | Bulb may be loose in socket | Remove bulb and reinsert securely |
| | Bulb has burned out | Replace the bulb |
| | Fuse has burned out | Replace the fuse |
| | Dirt on the stage obstructed the path of light | Clean the stage |
| Lamp burns out frequently | Voltage from power supply is too high | Use the brightness adjustment knob to lower brightness |
| | The bulb is not standard | Use the recommended bulb |
| Fuse burns out frequently | Voltage from power supply is too high | Use the brightness adjustment knob to lower brightness |
| Light flickers | Bulb needs replacement | Replace bulb |
| | Bulb may be loose in socket | Remove bulb and reinsert securely |

# MAINTENANCE

Please remember to ***never*** leave the microscope with eyepieces removed and always protect the microscope with the dust cover when not in use.

# SERVICE

***ACCU-SCOPE*** microscopes are precision instruments which require periodic servicing to keep them performing properly and to compensate for normal wear. A regular schedule of preventative maintenance by qualified personnel is highly recommended. Your authorized ***ACCU-SCOPE*** distributor can arrange for this service. Should unexpected problems be experienced with your instrument, proceed as follows:

1. Contact the ***ACCU-SCOPE*** distributor from whom you purchased the microscope. Some problems can be resolved simply over the telephone.

2. If it is determined that the microscope should be returned to your ***ACCU-SCOPE*** distributor or to ***ACCU-SCOPE*** for warranty repair, pack the instrument in its original Styrofoam shipping carton. If you no longer have this carton, pack the microscope in a crush-resistant carton with a minimum of three inches of a shock absorbing material surrounding it to prevent in-transit damage. The microscope should be wrapped in a plastic bag to prevent Styrofoam dust from damaging the microscope. Always ship the microscope in an upright position; ***NEVER SHIP A MICROSCOPE ON ITS SIDE***. The microscope or component should be shipped prepaid and insured.

## LIMITED MICROSCOPE WARRANTY

This microscope and its electronic components are warranted to be free from defects in material and workmanship for a period of five years from the date of invoice to the original (end user) purchaser. The LED lamp is warranted for a period of two years from the date of invoice to the original (end user) purchaser. This warranty does not cover damage caused in-transit, misuse, neglect, abuse or damage resulting from improper servicing or modification by other then ACCU-SCOPE approved service personnel. This warranty does not cover any routine maintenance work or any other work, which is reasonably expected to be performed by the purchaser. Normal wear is excluded from this warranty. No responsibility is assumed for unsatisfactory operating performance due to environmental conditions such as humidity, dust, corrosive chemicals, deposition of oil or other foreign matter, spillage or other conditions beyond the control of ACCU-SCOPE INC. This warranty expressly excludes any liability by ACCU-SCOPE INC. for consequential loss or damage on any grounds, such as (but not limited to) the non-availability to the End User of the product(s) under warranty or the need to repair work processes. Should any defect in material, workmanship or electronic component occur under this warranty contact your ACCU-SCOPE distributor or ACCU-SCOPE at (631) 864-1000. This warranty is limited to the continental United States of America. All items returned for warranty repair must be sent freight prepaid and insured to ACCU-SCOPE INC., 73 Mall Drive, Commack, NY 11725 – USA. All warranty repairs will be returned freight prepaid to any destination within the continental United States of America, for all foreign warranty repairs return freight charges are the responsibility of the individual/company who returned the merchandise for repair.

ACCU-SCOPE is a registered trademark of ACCU-SCOPE INC., Commack, NY 11725